HÄFELE

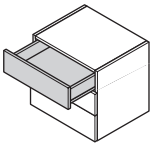

Matrix Box Single

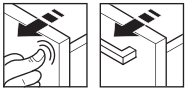

514.40.xxx
514.41.xxx
514.42.xxx

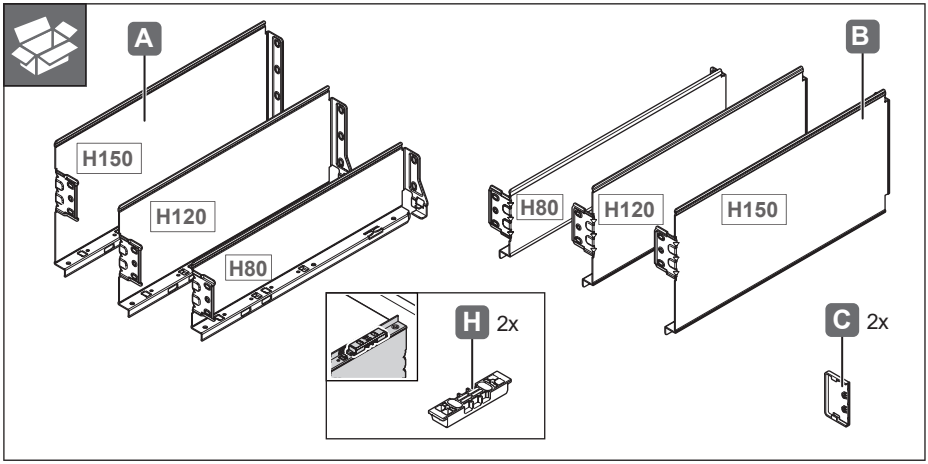

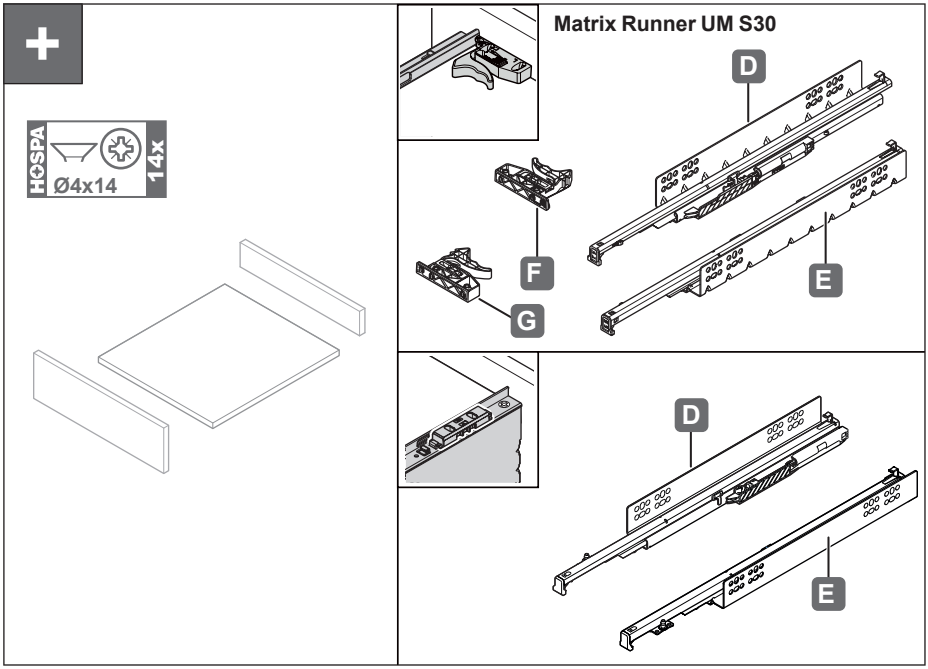

732.25.045

[WS74]

HDE 17.09.2024

X = 7 ~ 18

„mm“

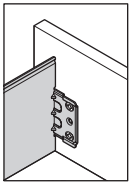

H80

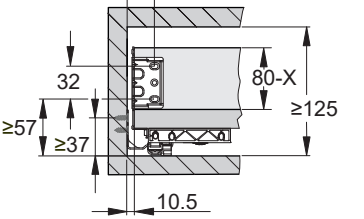

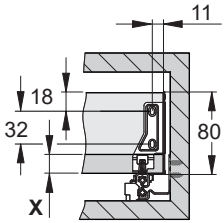

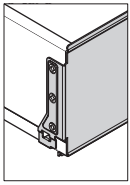

H120

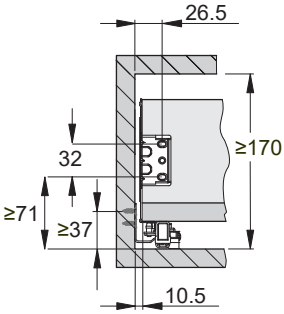

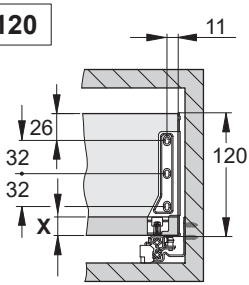

H150

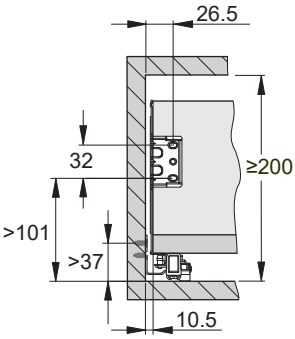

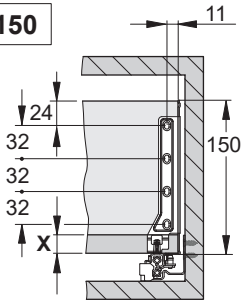

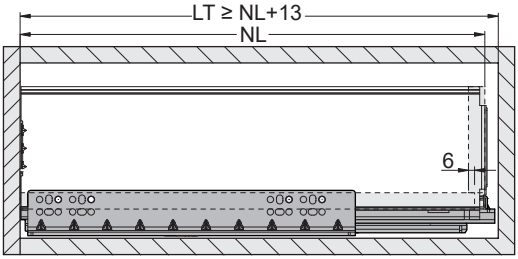

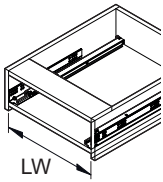

NL	LT(min)
250	263
300	313
350	363
400	413
450	463
500	513
550	563

732.25.045

[WS74]

HDE 17.09.2024

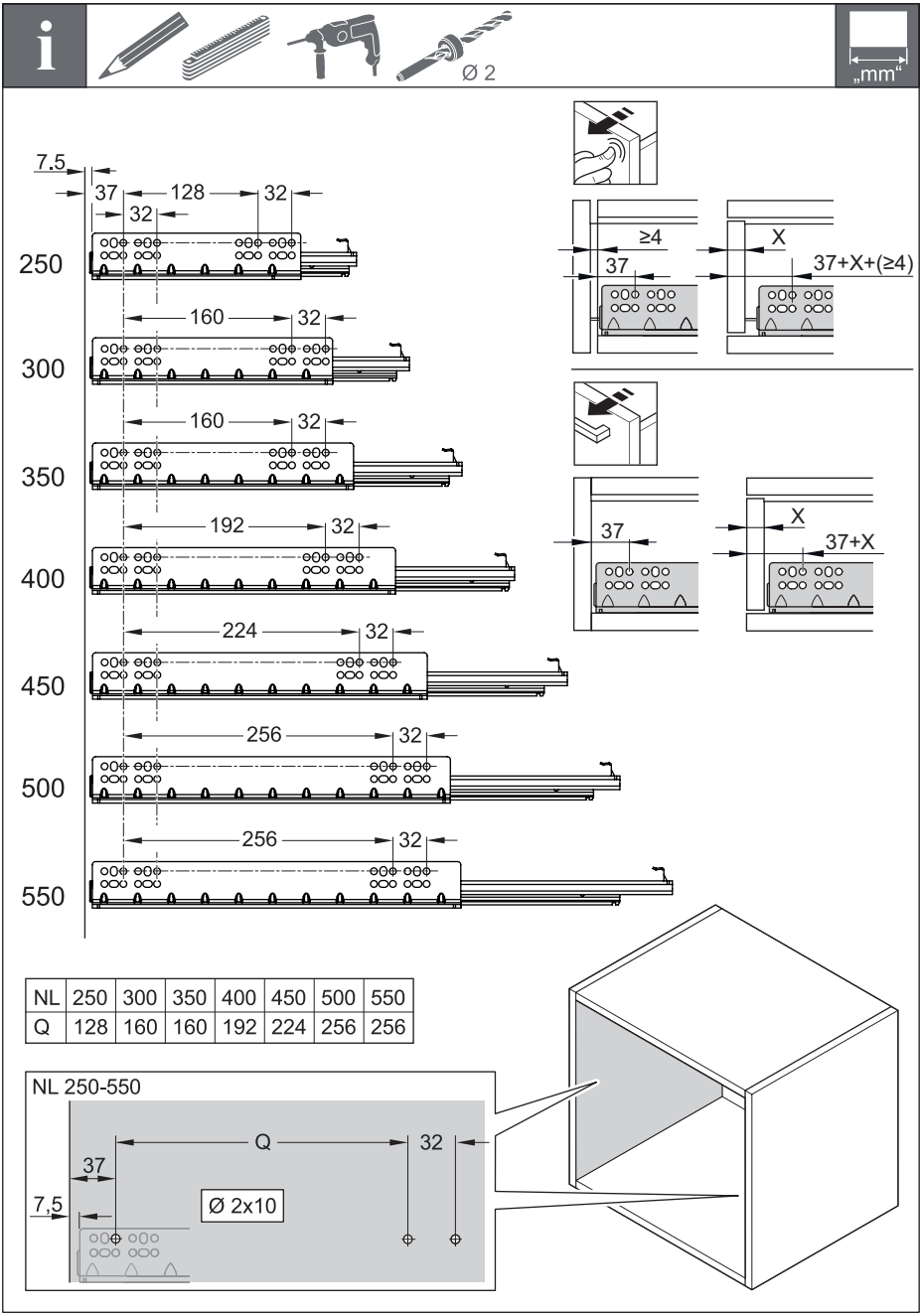

NL	250	300	350	400	450	500	550
Q	128	160	160	192	224	256	256

732.25.045

[WS74]

HDE 17.09.2024

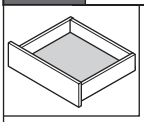

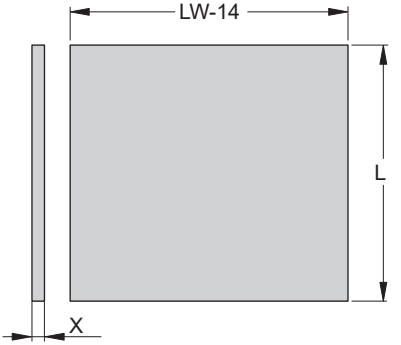

NL	250	300	350	400	450	500	550
L	240	290	340	390	440	490	540

X = 7~18

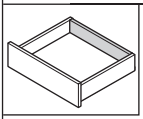

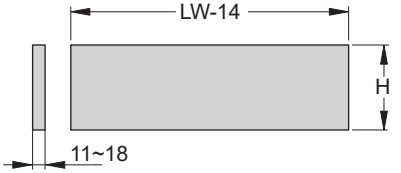

	H80	**H120**	**H150**
H	78-X	118-X	148-X

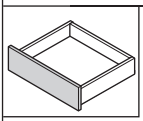

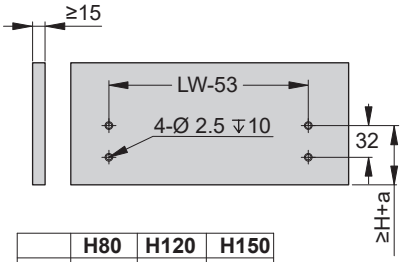

	H80	**H120**	**H150**
H	57	71	101

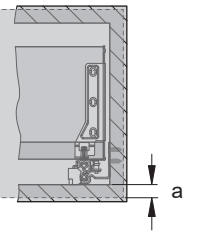

732.25.045

[WS74]

HDE 17.09.2024

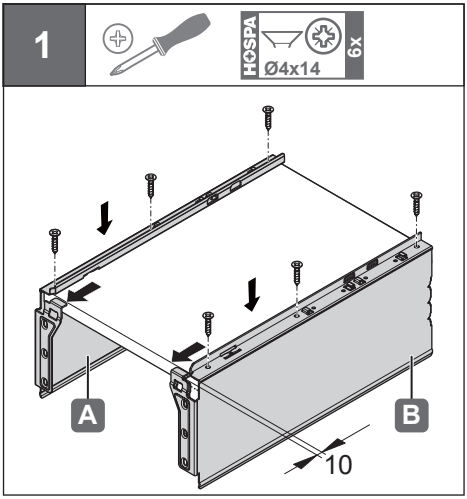

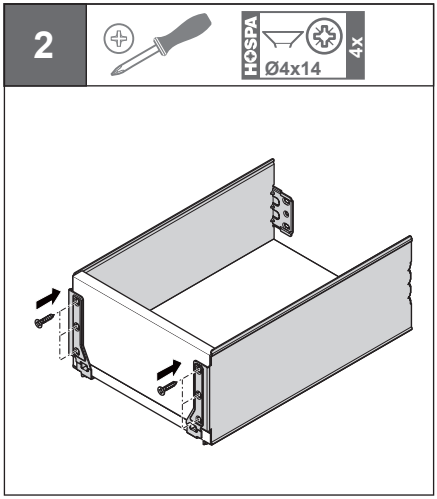

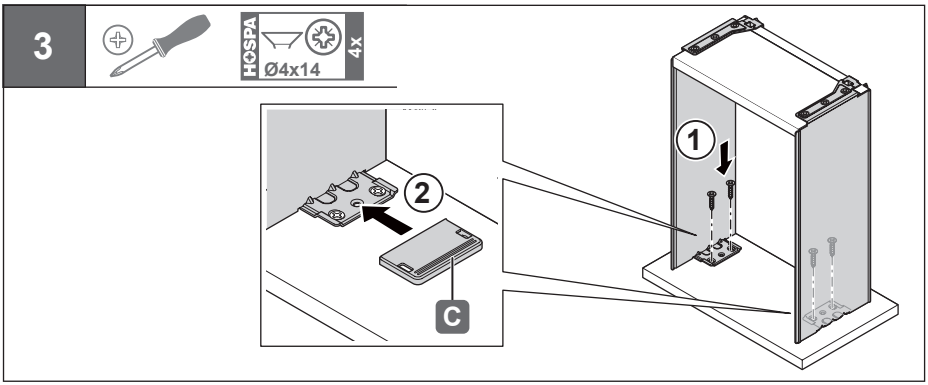

732.25.045

[WS74]

HDE 17.09.2024

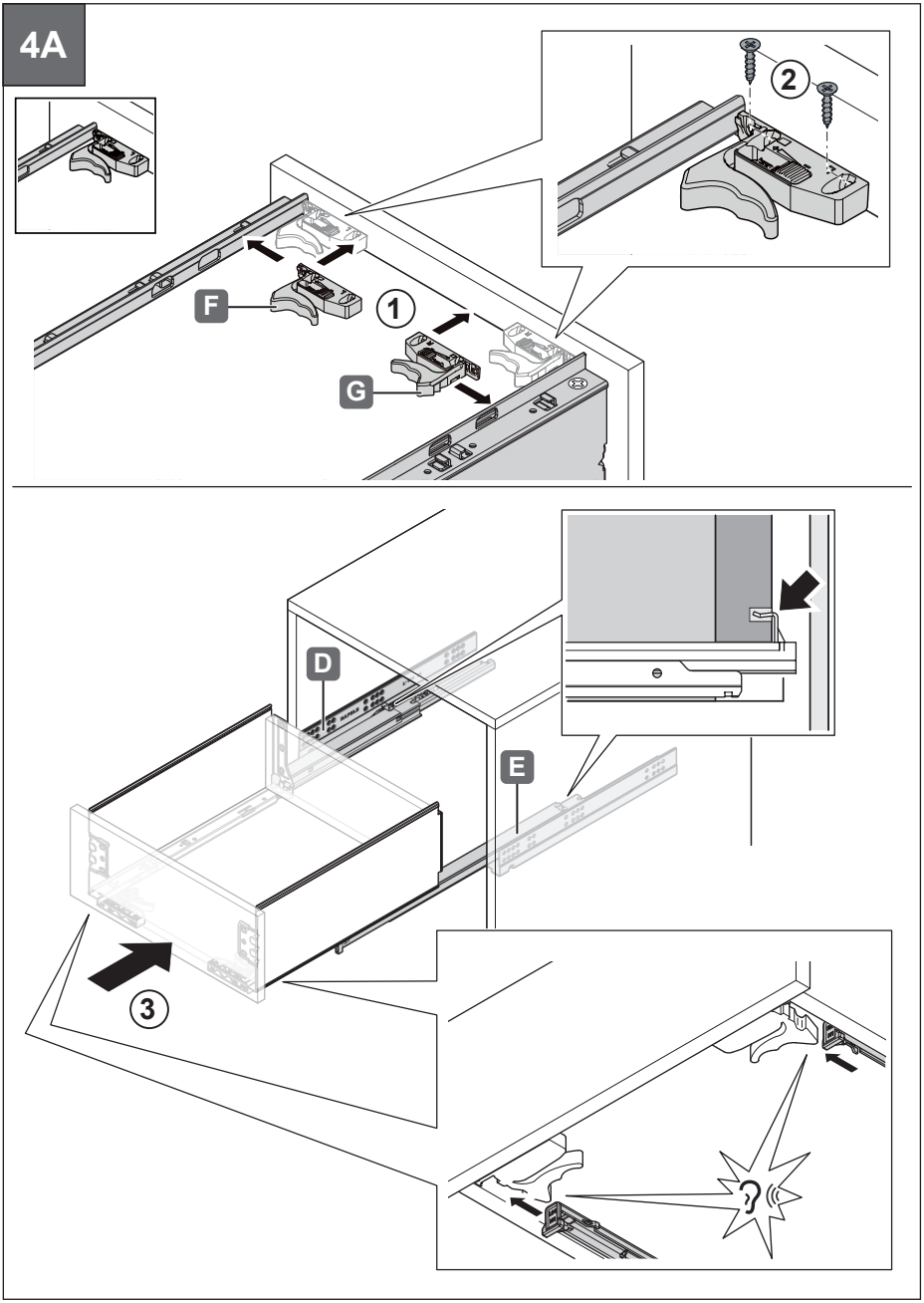

732.25.045

[WS74]

HDE 17.09.2024

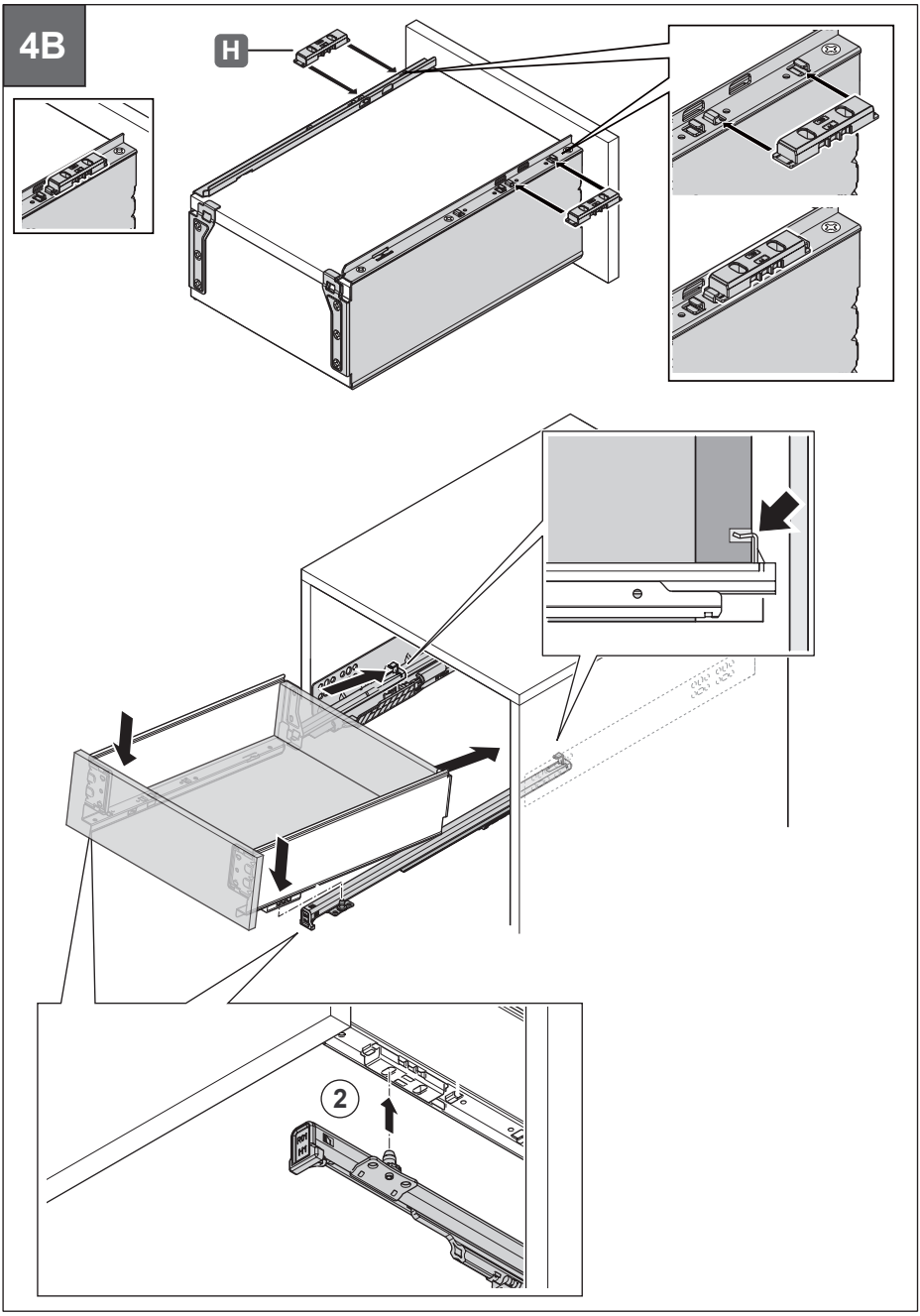

732.25.045

[WS74]

HDE 17.09.2024

732.25.045

[WS74]

HDE 17.09.2024

Subject to alteration

© 2024 by Häfele SE & Co KG
Adolf-Häfele-Str. 1 · D-72202 Nagold · www.hafele.com