HÄFELE

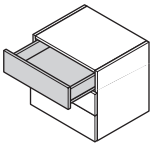

Matrix Box Single
+ Matrix Runner UM A30 synch.

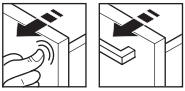

514.40.70x
514.41.70x
514.42.70x

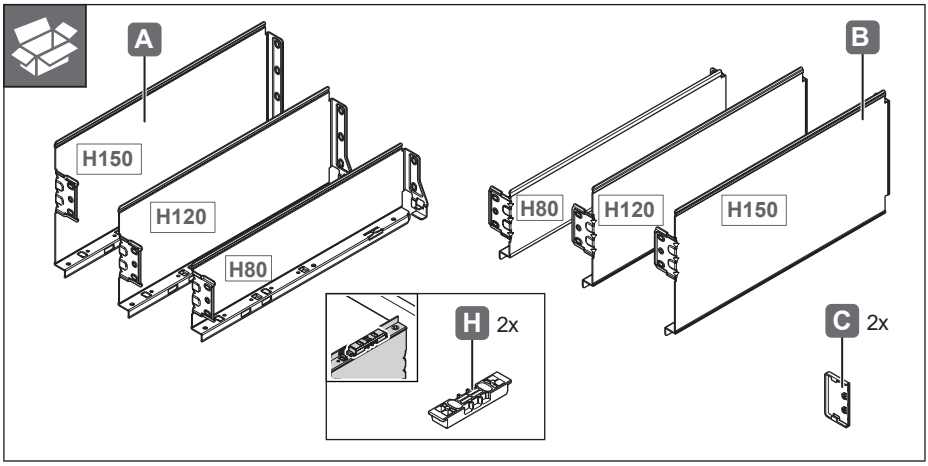

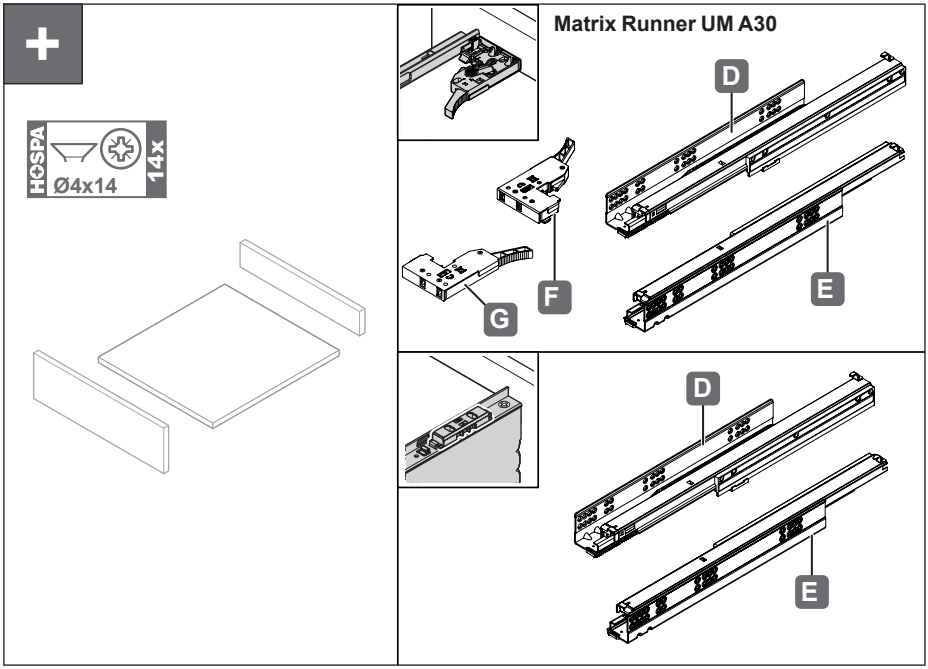

732.25.005

[WS162]

HDE 21.11.2024

X = 13 ~ 18

„mm“

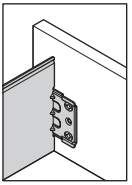

H80

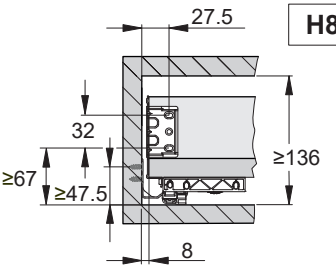

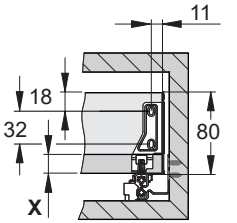

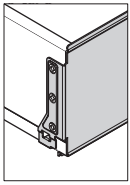

H120

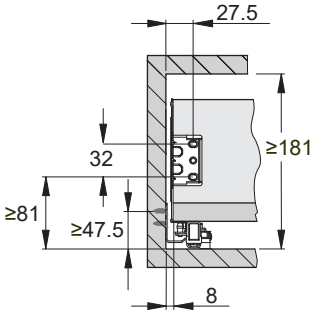

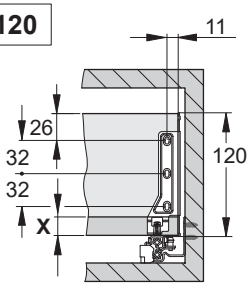

H150

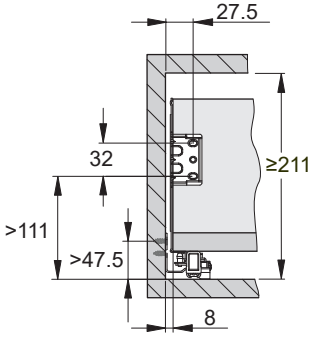

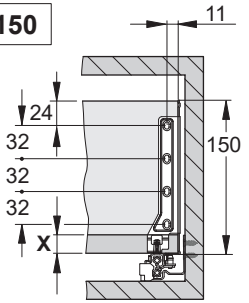

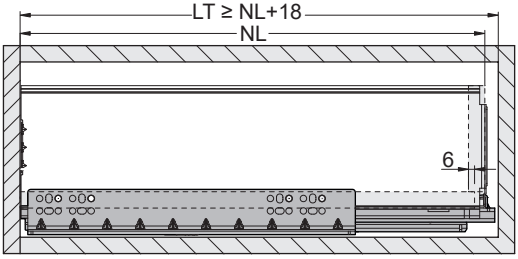

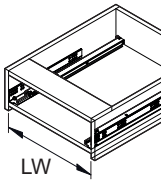

NL	LT(min)
300	318
350	368
400	418
450	468
500	518
550	568

732.25.005

[WS162]

HDE 21.11.2024

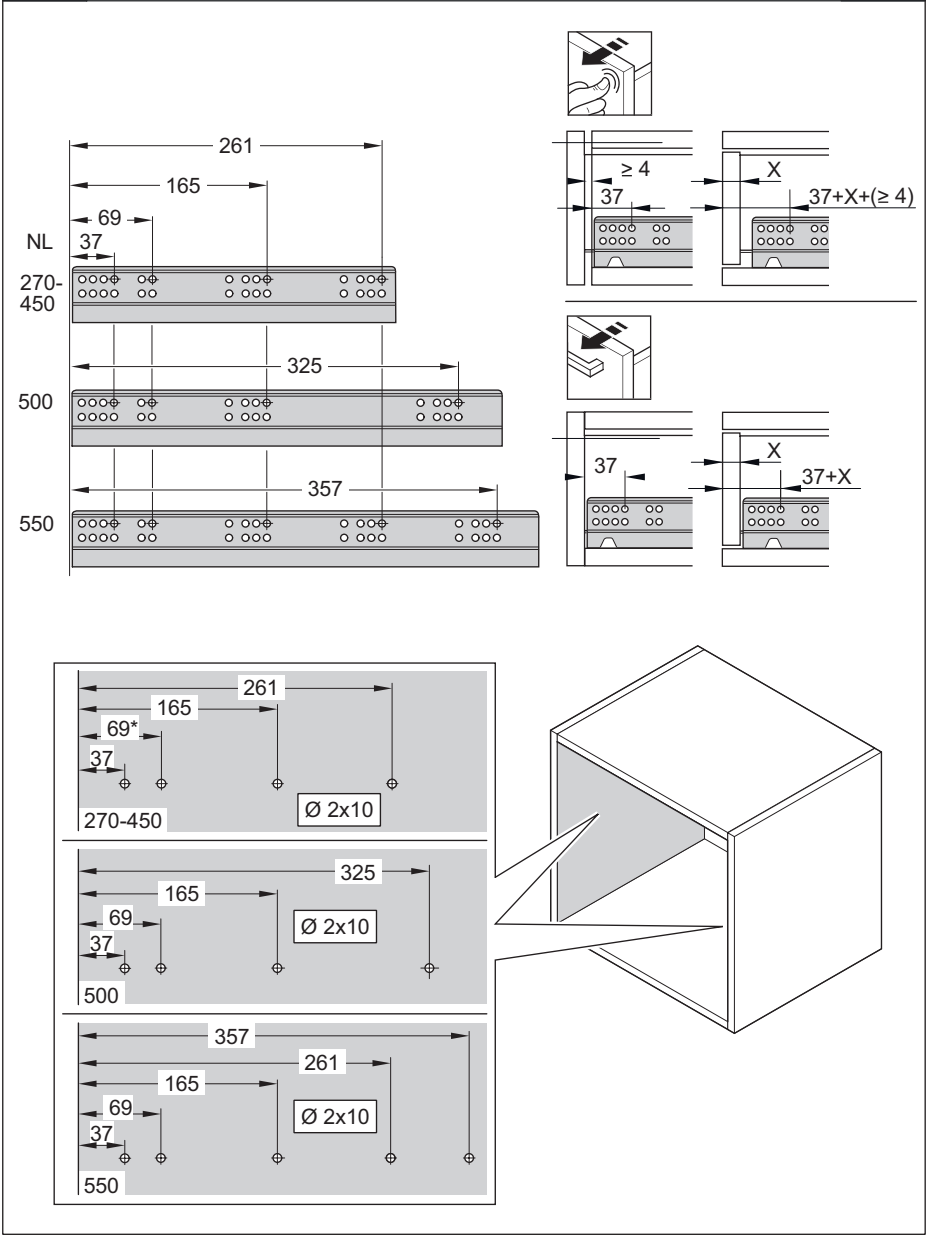

732.25.005

[WS162]

HDE 21.11.2024

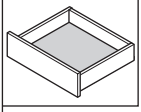

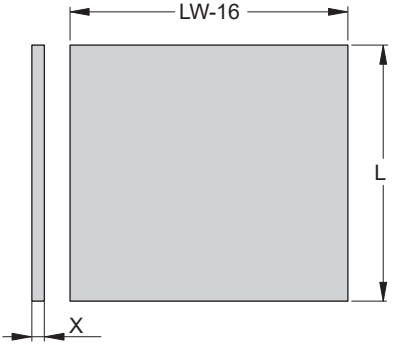

NL	250	300	350	400	450	500	550
L	240	290	340	390	440	490	540

X = 13~18

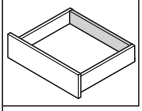

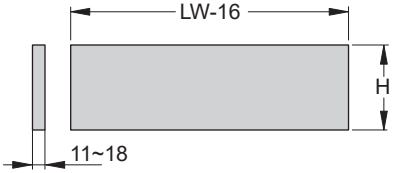

	H80	**H120**	**H150**
H	78-X	118-X	148-X

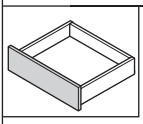

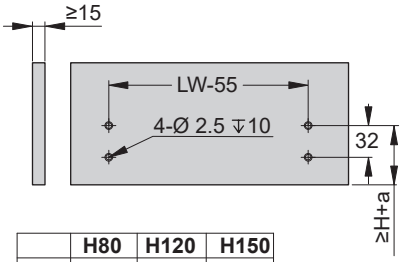

	H80	**H120**	**H150**
H	67	81	111

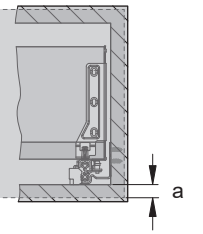

732.25.005

[WS162]

HDE 21.11.2024

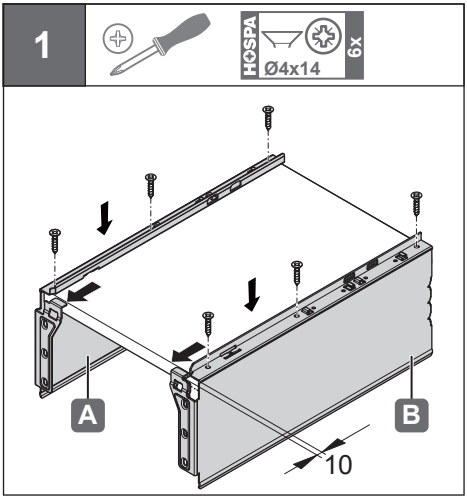

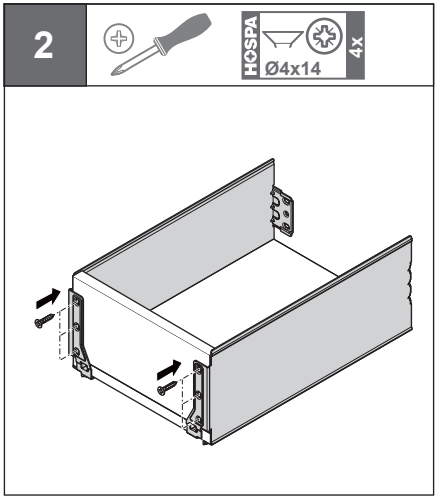

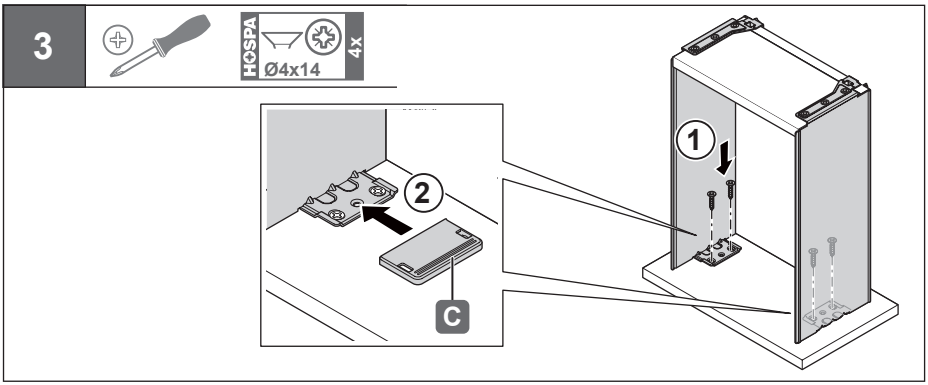

732.25.005

[WS162]

HDE 21.11.2024

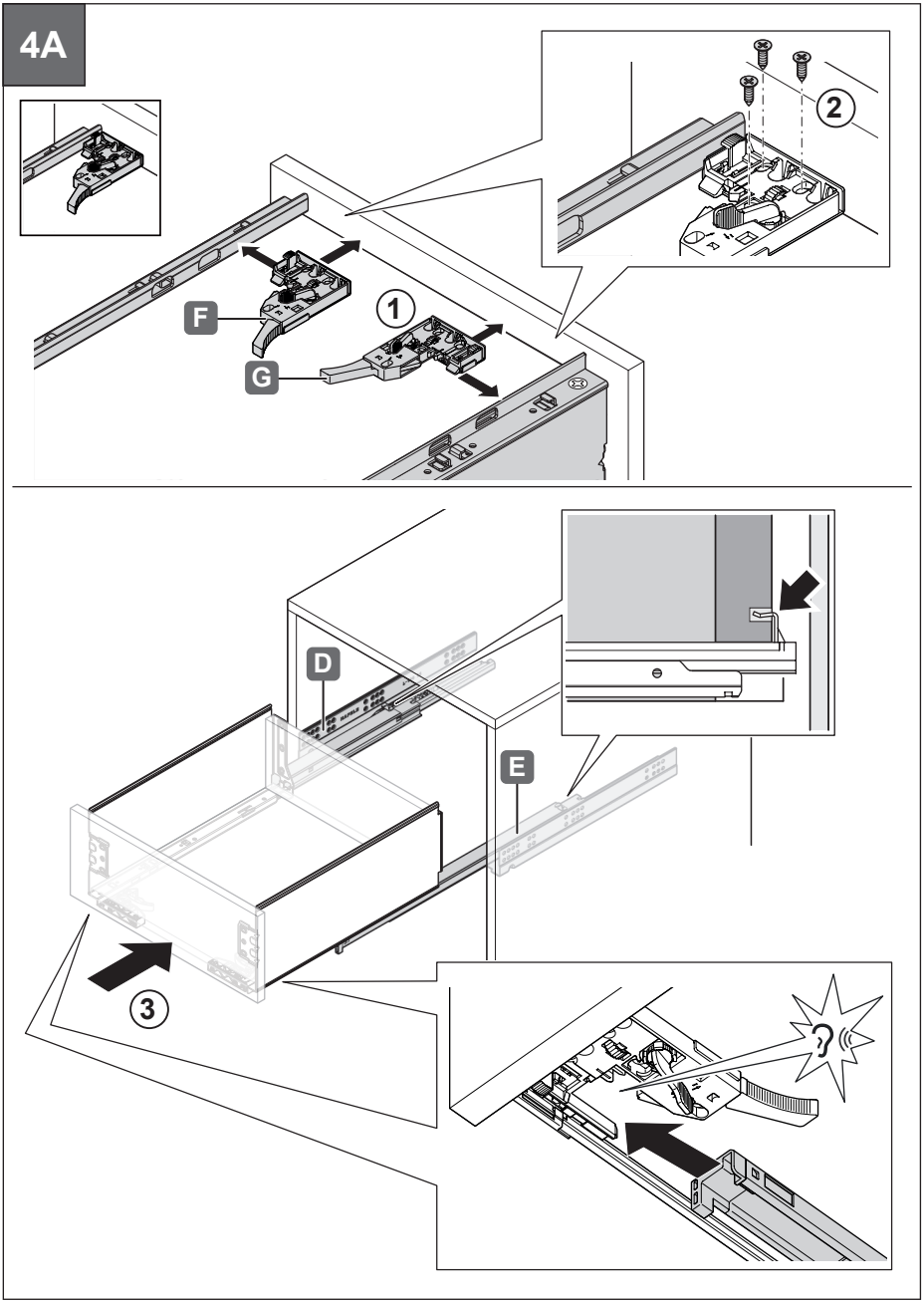

732.25.005

[WS162]

HDE 21.11.2024

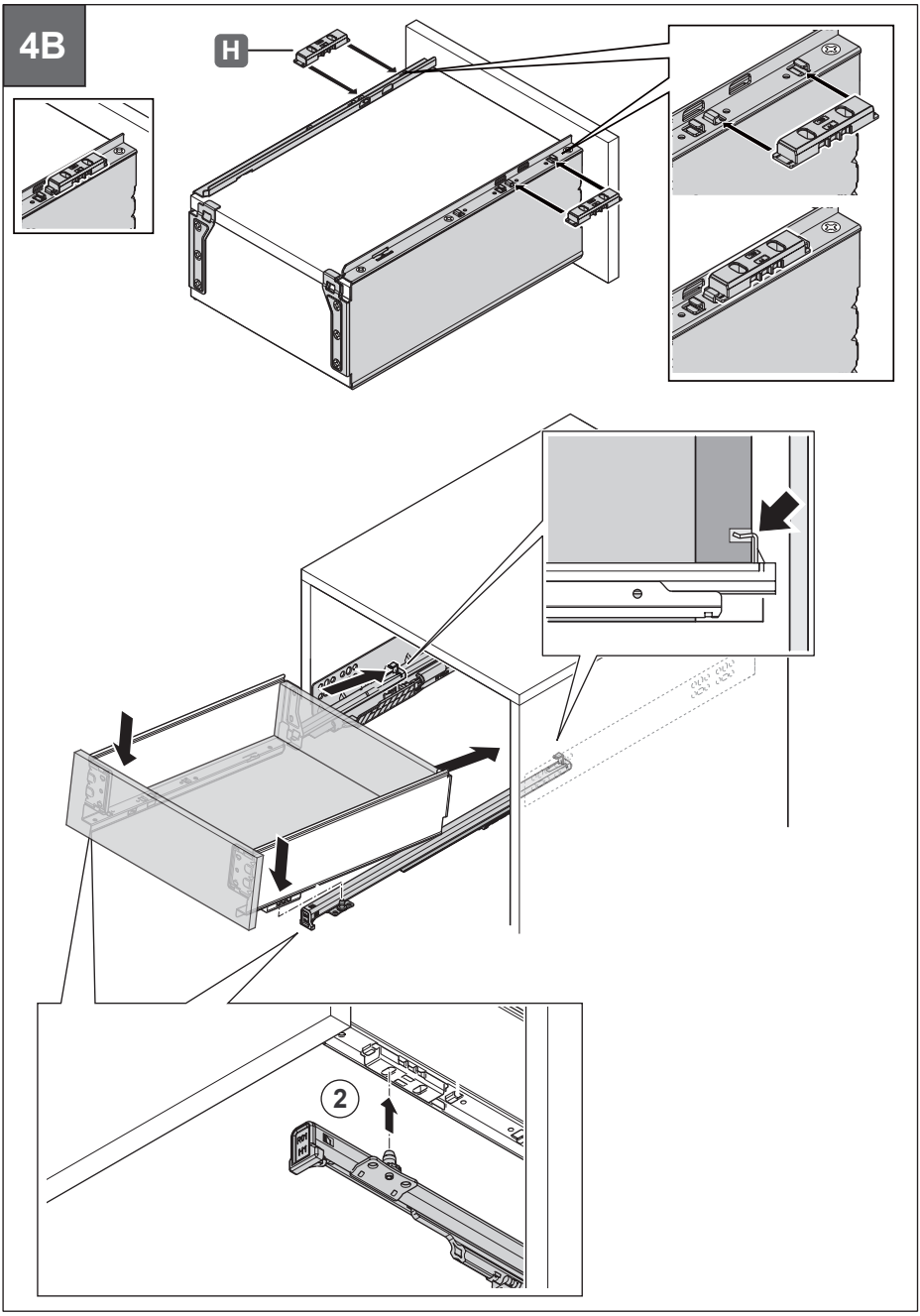

732.25.005

[WS162]

HDE 21.11.2024

© 2024 by Häfele SE & Co KG